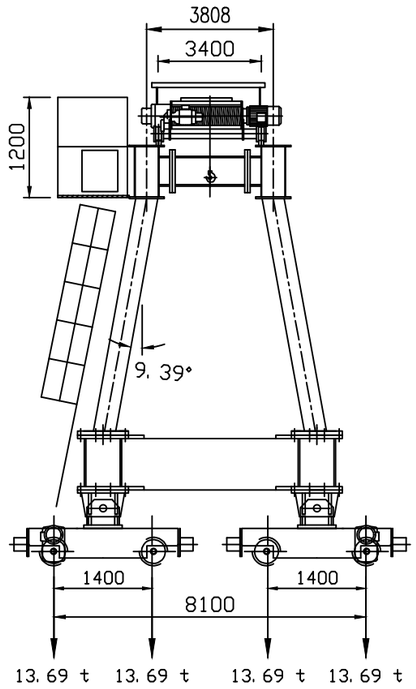

VIEW B–B

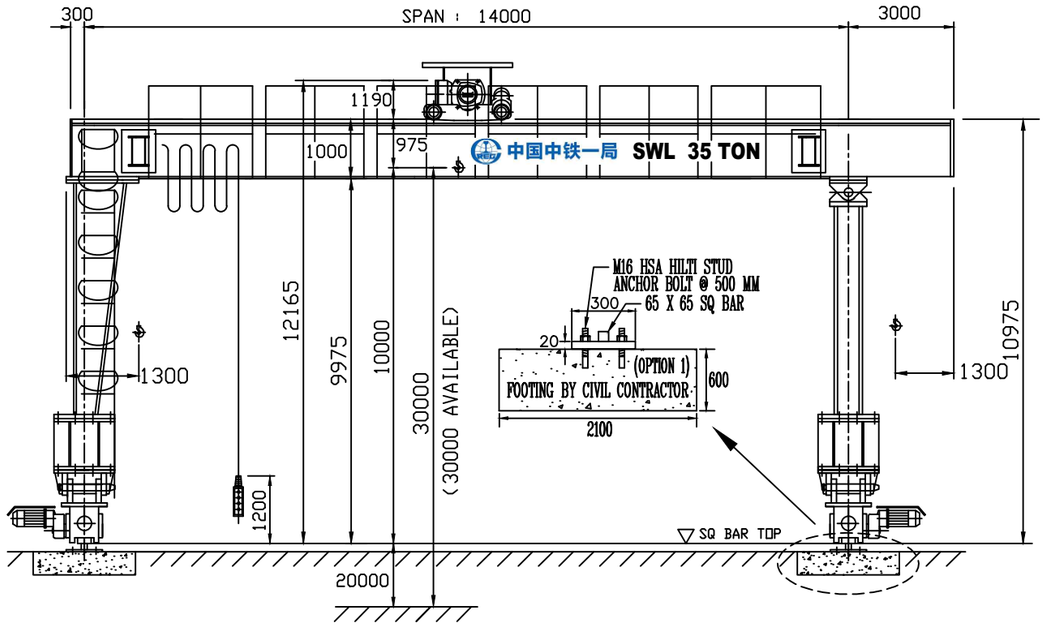

VIEW A–A

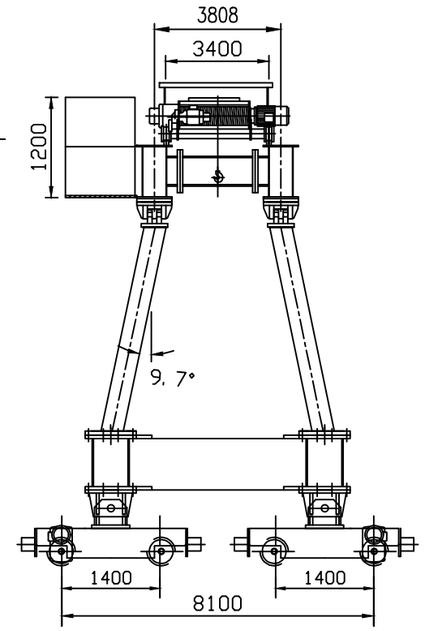

VIEW C–C

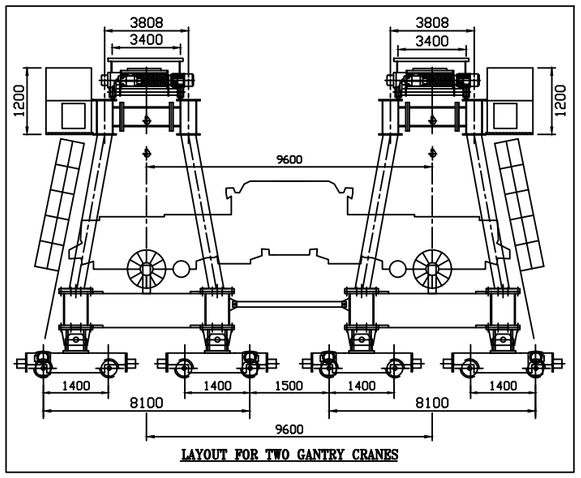

LAYOUT FOR TWO GANTRY CRANES

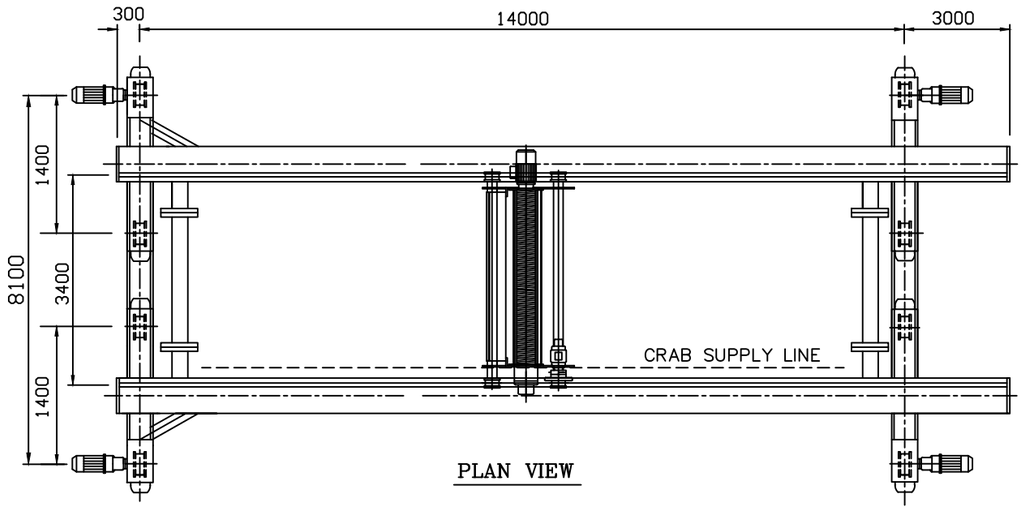

PLAN VIEW

Crane Weight (incl Hoist)	34507	kg
Girder Weight	13612	kg
Hoist Weight	5590	kg
Platform, Ladder, & Handrail	1036	kg
Fixed Leg Weight	4028	kg
Flexible Leg Weight	2621	kg
Hinge Weight		
Girder Tie Beam Weight	2096	kg
Sill Beam	1968	kg
Pivot Bracket	2531	kg
Bogies Weight	1025	kg
Max. Static Vertical Wheel Load	136.9	kN

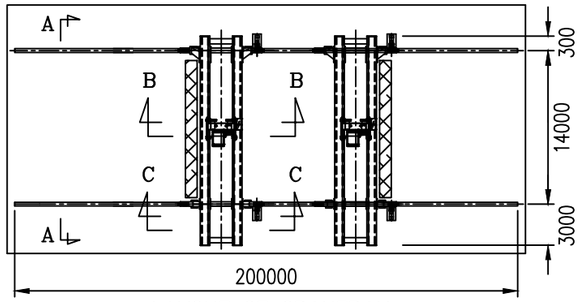

LAYOUT OF CRANEBAY

SPECIFICATION:

Capacity	:	35 tonnes	Power supply	:	400V 3PHASE 50HZ
Hoist model	:	35 TON WINCH HOIST X 30 M LIFT	Control voltage	:	48 V
Lifting speed	:	0. 8-8 m/min 55 kw M4	Crane class	:	FEM 2M (M5)
Crosstravel speed	:	20 m/min 1. 9 kwx2 M4	Operation	:	Outdoor
Longtravel speed	:	32/8 m/min 1. 9 kwx4 M5	Control method	:	Via push button pendant (mobile)

CAD PRODUCED DRAWING – NO MANUAL REVISION ALLOWED

This document is property of KRANECARE SERVICES PTE LTD
It shall neither be shown to Third Parties, nor used for purposes other than those for which it has been produced.

REV.	DESCRIPTION	DATE	DRAWN	CHKD.	APP.
00	FOR APPROVAL	23-12-22	PETER	PETER	H.K. SOH

MAIN CONTRACTOR / OWNER REFERENCE
CHINA RAILWAY FIRST GROUP
TE23 TANJUNG RHU

PROJECT NUMBER
S/O-J0062

PROJECT
DOUBLE GIRDER GOLIATH GANTRY CRANE
SWL-35T SPAN-(14+3)M
HOL-10M + 20M
TL-200M

KRANECARE SERVICES PTE LTD
32 Old Toh Tuck Road, #04-07,
I.Biz Centre, Singapore 597658
Tel: +65 6762 2393
Fax: +65 6762 2611

DRAWING TITLE:
35 TON X (14+3) M DOUBLE GIRDER GOLIATH GANTRY CRANE

DRAWING NUMBER: KC/GC/22/12/23-1

SHEET OF SHEETS 1 OF 1

A3